Wire rod conveyorchain

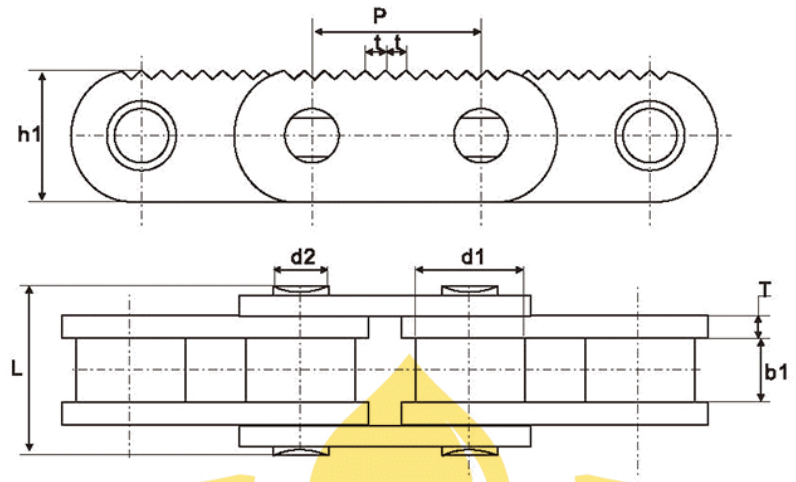

SAWTOOTH-PLATE CONVEYOR CHAINS

Chain No .	P	d1	b1	d2	L	h1	T	t	U.T. S. (KN)	Wt. (Kg/m)
ZLS-80-1	80.0	30.00	32.00	14.27	59.00	55.00	5.00	20.00	222.40	8.9
ZLS-80-2	80.0	42.00	23.50	16.00	55.00	60.00	6.00	10.00	222.40	12.20
ZLS-125	125.0	60.00	27.00	14.27	60.00	60.00	6.00	25.00	100.00	13.10

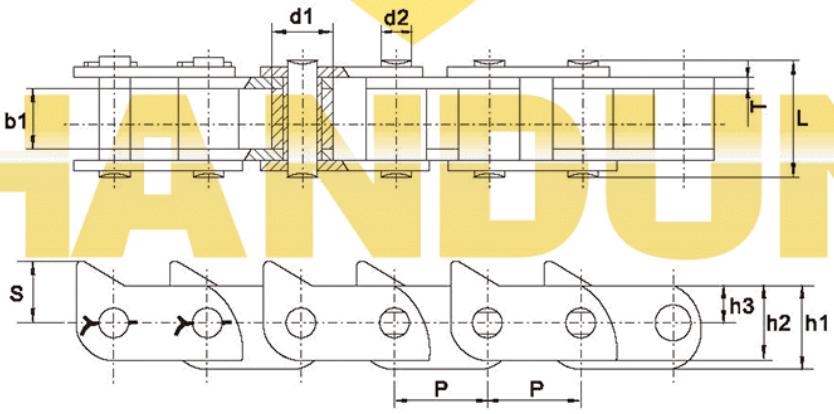

SHARP-PLATE CONVEYOR CHAINS

Chain No .	P	d1	b1	d2	L	h1	h2	h3	S	T	U.T. S. (KN)
ZLS-66.27	66.27	31.75	28.40	11.18	61.00	44.45	38.10	19.81	35.60	6.30	120.0